UL 150 - 2

2V 150AH

STANDBY

Ultracell®

'**Quality** in Every Language'

Image

AWAITING IMAGE

Terminal Type

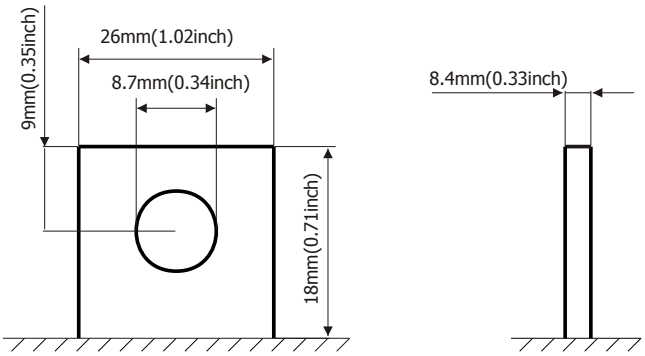

Dimensions

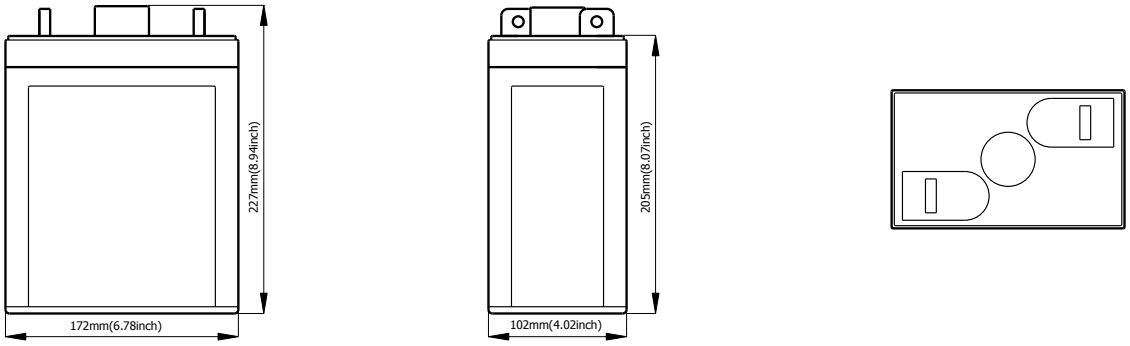

Specifications

Battery Model	UL 150 - 2			
Designed Floating Life	8 Years			
Capacity (25°C)	20HR (7.56A,1.75V)	10HR (15A,1.75V)	5HR (27A,1.75V)	1HR (97A,1.75V)
	151AH	150AH	135AH	97AH
Dimensions	Length	Width	Height	Total Height
	172mm	102mm	205mm	277mm
Approx. Weight	8.4Kg			
Internal Resistance	Fully Charged at 25°C 0.0008Ohm			
Self Discharge	3% of capacity declined per month at 25°C			
Capacity Affected by Temperature	40°C	25°C	0°C	-15°C
	102%	100%	85%	65%
Charge Voltage (25°C)	Cycle Use		Float Use	
	2.4-2.46V (-5mV/C), max. Current: 37.5A		2.26-2.30V (-3.3mV/C)	

Construction

Component	Raw material
Positive	Lead dioxide
Negative	Lead
Container	ABS (Flame Retardent optional)
Cover	ABS (Flame Retardent optional)
Sealant	Epoxy Resin
Safety Valve	EPDR
Terminal	Copper
Separator	Fibre Glass
Electrolyte	Sulphuric acid

Sealed and maintenance free option

Non-spillable construction design

CE 1188 MH 29410

Tel +44 (0) 151 523 2777
Fax +44 (0) 151 523 0855
E-mail info@ultracell.co.uk
Web www.ultracell.co.uk

Copyright 2008 - **Ultracell** (UK) Ltd

Ultracell (UK) Limited | 7 Vesty Business Park | Vesty Road | Liverpool | Merseyside | L30 1NY | United Kingdom

UL 150 - 2

2V 150AH

STANDBY

Ultracell®

'**Quality** in Every Language'

Charge Characteristic

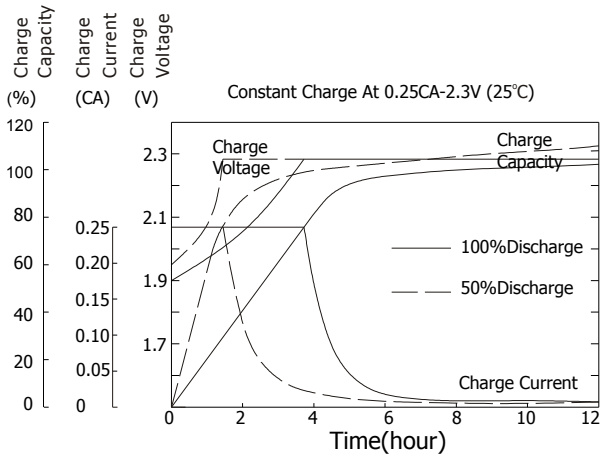

Discharge Characteristic 25°C

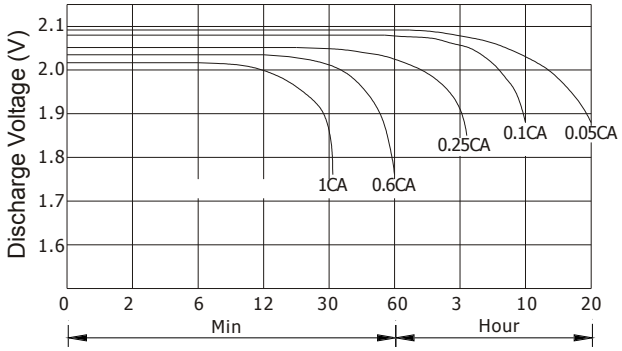

Relationship of OCV and state of charge

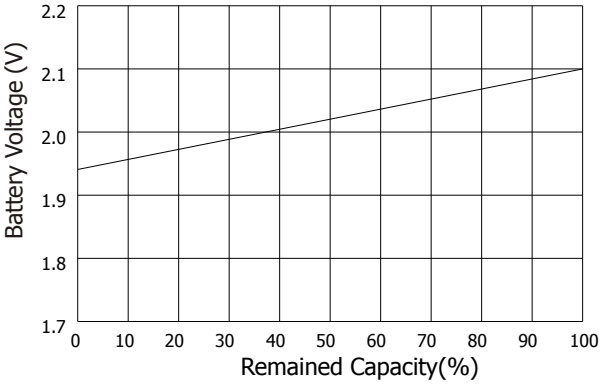

Self Discharge Characteristics

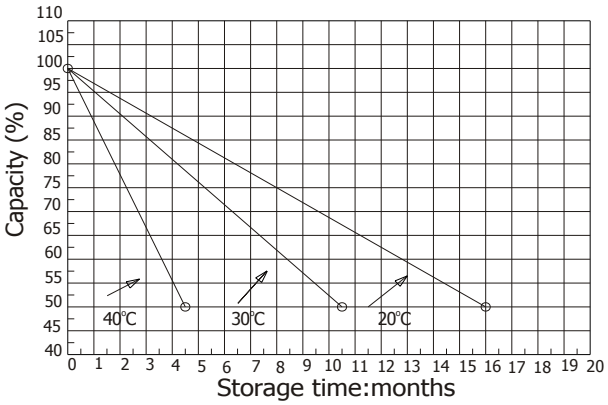

Constant Current Discharge Ratings - amperes at 25°C

F.V / Time	5 MIN	10 MIN	15 MIN	30 MIN	1 HR	3 HR	5 HR	10 HR	20 HR
1.60 V	525	360	263	158	99.0	41.0	28.6	15.9	7.91
1.67 V	473	329	255	153	98.9	40.8	28.4	15.7	7.88
1.70 V	449	317	246	150	98.6	40.8	28.4	15.5	7.88
1.75 V	399	293	233	147	97.5	40.5	28.2	15.3	7.84
1.80 V	360	272	222	143	96.3	40.4	27.9	15.0	7.56
1.85 V	273	224	192	131	95.3	40.2	27.7	14.7	7.11

Constant Power Discharge Ratings - watts at 25°C

F.V / Time	5 MIN	10 MIN	15 MIN	30 MIN	1 HR	3 HR	5 HR	10 HR	20 HR
1.60 V	866	597	465	297	195	78.6	54.8	31.8	15.8
1.67 V	821	590	461	291	1889	78.6	54.8	31.3	15.8
1.70 V	767	575	453	284	184	78.6	54.8	31.1	15.8
1.75 V	714	537	426	276	182	77.4	54.2	30.6	15.7
1.80 V	641	500	401	269	179	76.4	53.3	30.0	15.1
1.85 V	513	414	350	246	177	76.1	52.5	29.5	14.2

CE 1188 MH 29410

Tel +44 (0) 151 523 2777
Fax +44 (0) 151 523 0855
E-mail info@ultracell.co.uk
Web www.ultracell.co.uk

Copyright 2008 - **Ultracell** (UK) Ltd

Ultracell (UK) Limited | 7 Vesty Business Park | Vesty Road | Liverpool | Merseyside | L30 1NY | United Kingdom